THERMACOR	FERRO-THERM **Details**	FTAD **7.301**
	RISER DETAIL	3.14.07

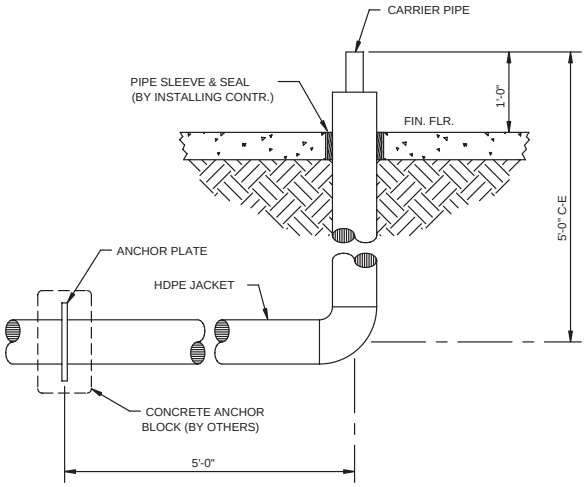

ELEVATION

PIPING RISER DETAIL
SCALE: NONE

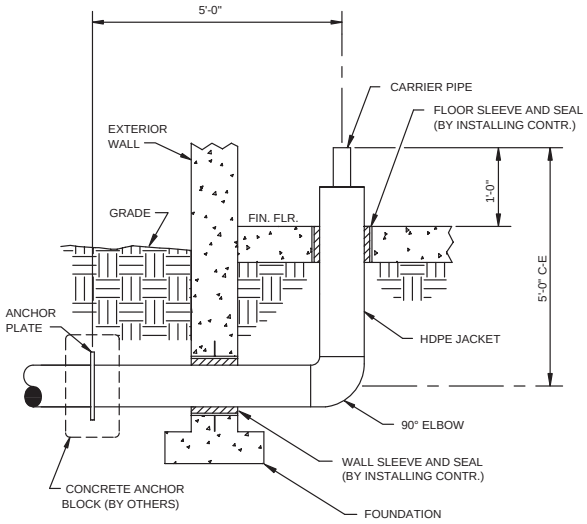

ELEVATION

BUILDING RISER DETAIL
SCALE: NONE

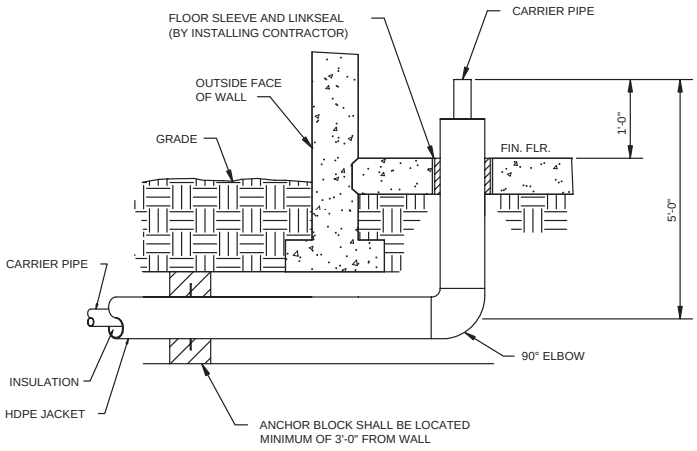

BUILDING RISER DETAIL
SCALE: NONE

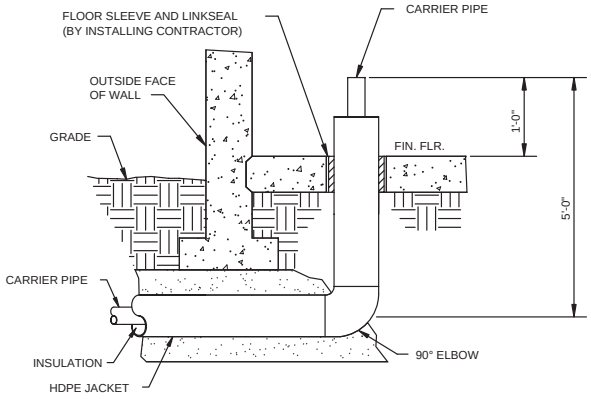

ELEVATION

BUILDING RISER DETAIL
SCALE: NONE

THERMACOR	FERRO-THERM **Details**	FTAD **7.302**
	WALL PENETRATION DETAIL	3.14.07

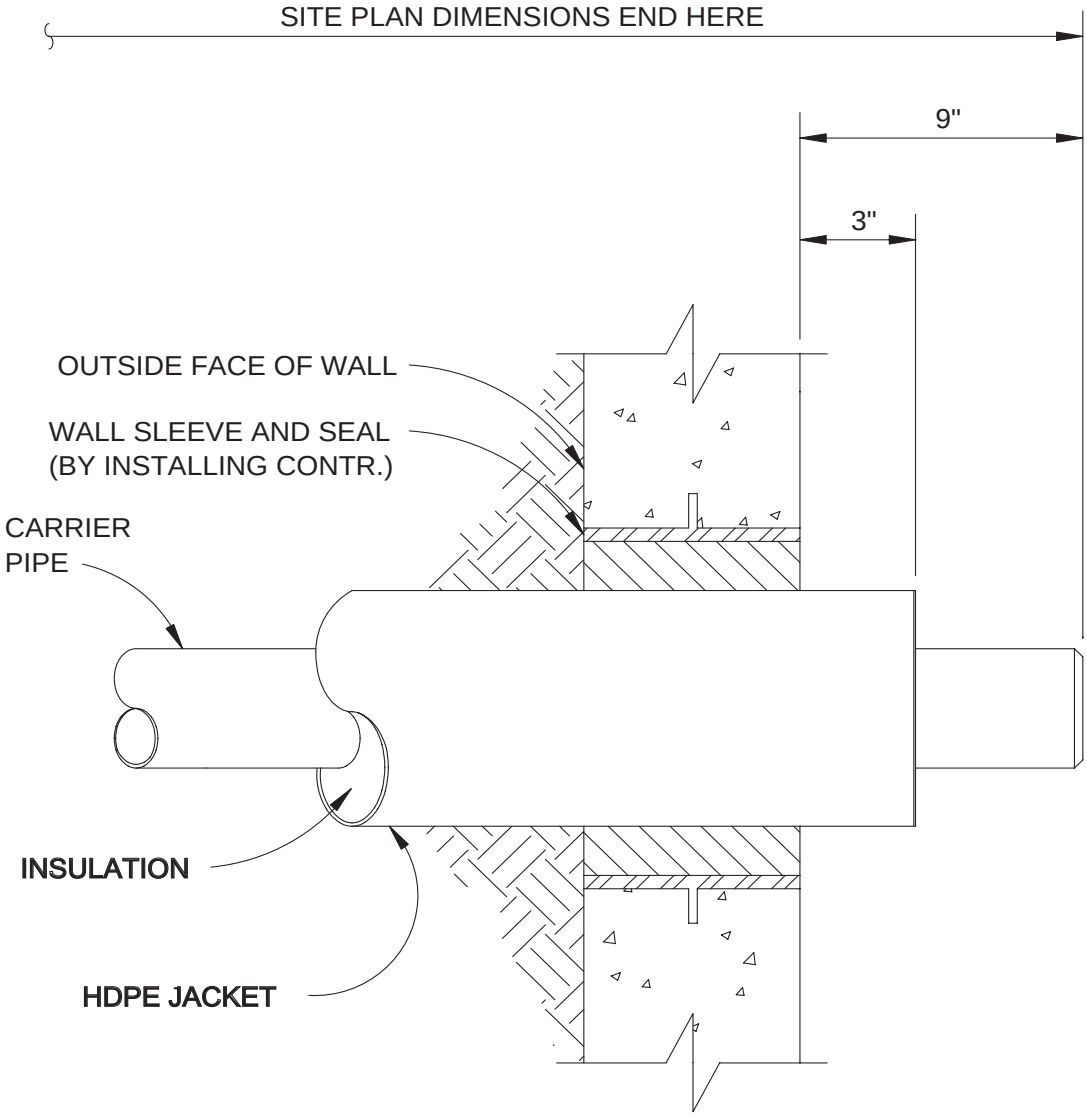

WALL PENETRATION DETAIL

SCALE: NONE

THERMACOR	FERRO-THERM **Details**	FTAD **7.303**
	EXPANSION BOLSTER DETAIL	1.09.08

INSTALLATION INSTRUCTIONS:

EXPANSION BOLSTERS PROCEDURE

1. EXPANSION BOLSTER MATERIAL IS SUPPLIED IN PADS:
   6'–0" LONG x 3" THICK x HEIGHT SPECIFIED ON CHART.
   4'–0" LONG x 1" THICK x HEIGHT SPECIFIED ON CHART.
2. PLACE BOLSTER PADS AGAINST JACKET AND CURVE AROUND ELBOW AS SHOWN. HOLD IN PLACE BY ATTACHING PADS TO JACKET WITH DUCT TAPE OR EQUIVALENT ON TOP AND BEDDING SAND ON THE BOTTOM. BE CERTAIN THAT THE BOLSTER PADS FITS SNUG TO JACKET.
3. BOLSTER PAD CONFIGURATION IS DEPENDENT ON LAYOUT & WILL BE SHOWN ON THE INSTALLATION DRAWING.

PVC JACKET OD (INCHES)	HDPE JACKET OD (INCHES)	PAD HEIGHT (INCHES)
3	–	7
4	5.40	7
6	6.68	7
8	8.68	7
10	10.85	13
12	12.85	13
14	14.1	13
16	16.1	17
–	18.2	17
–	20.28	17
–	22.2	25
–	24.38	25
–	28.25	25

SCALE: NONE

* NOTE:
DUCT TAPE TO BE 1'–0" ON CENTERS.

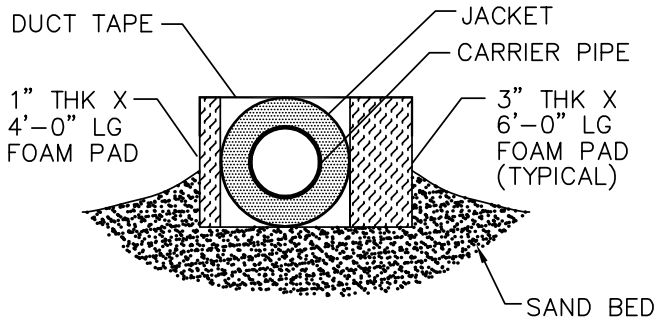

CROSS SECTION

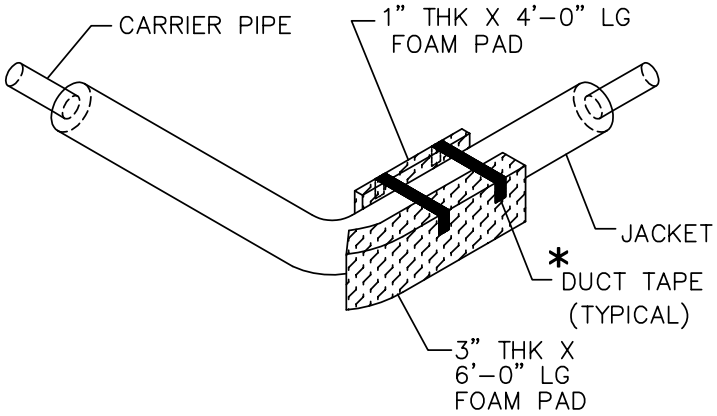

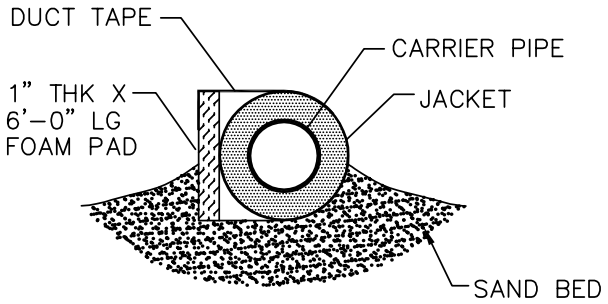

CROSS SECTION

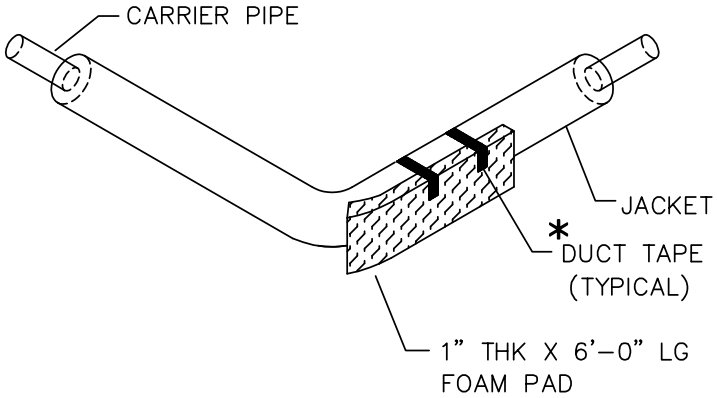

THERMACOR	FERRO-THERM **Details**	FTAD **7.304**
	EXPANSION LOOP DETAIL	1.10.08

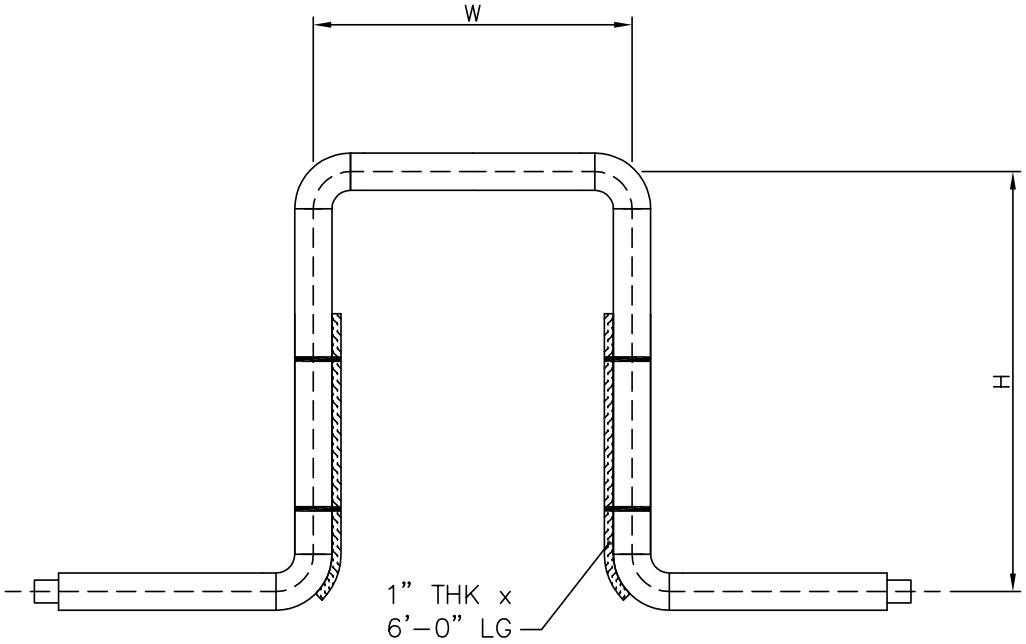

(1- PAD VIEW)

EXPANSION LOOP DETAIL

SCALE: NONE

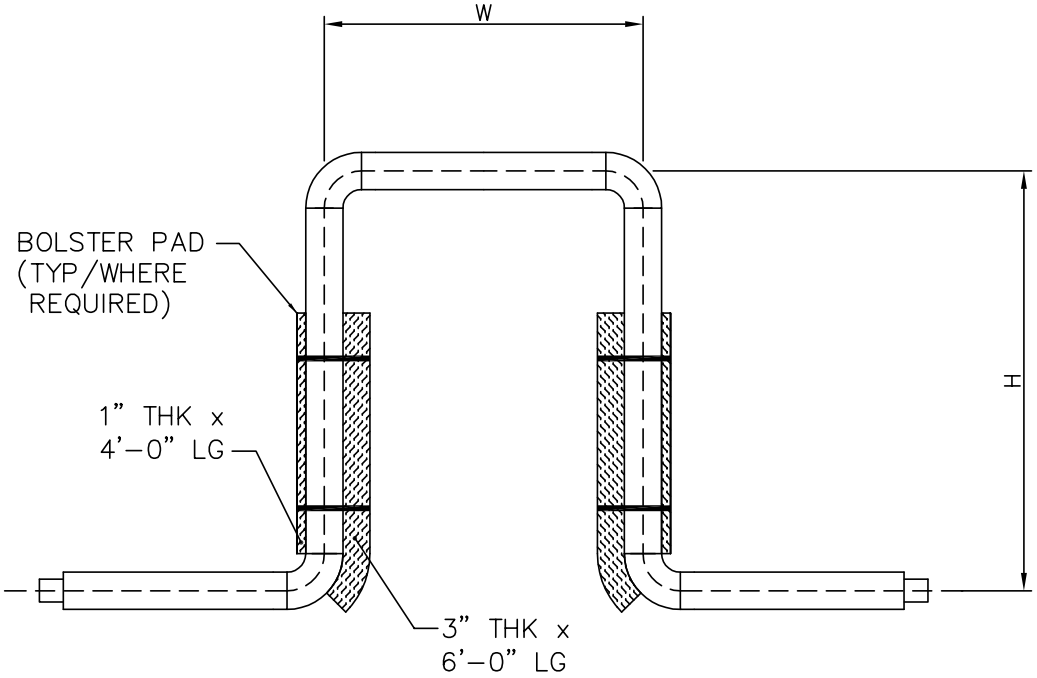

(2- PAD VIEW)

EXPANSION LOOP DETAIL

SCALE: NONE

THERMACOR	FERRO-THERM **Details**	FTAD **7.305**
	ANCHOR DETAIL	3.14.07

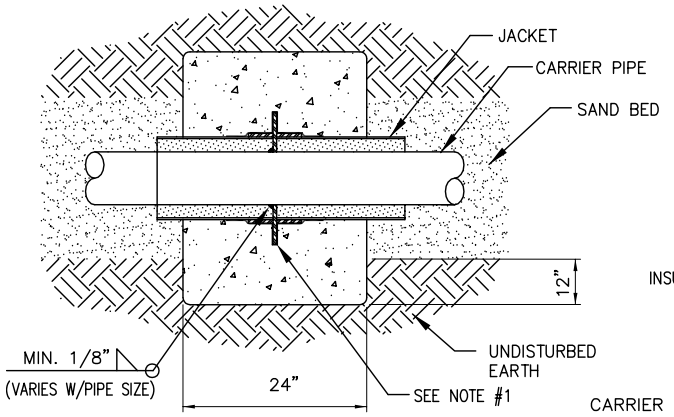

TOP VIEW

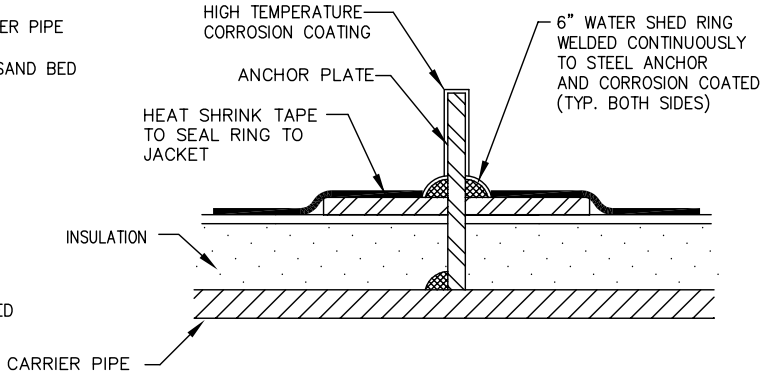

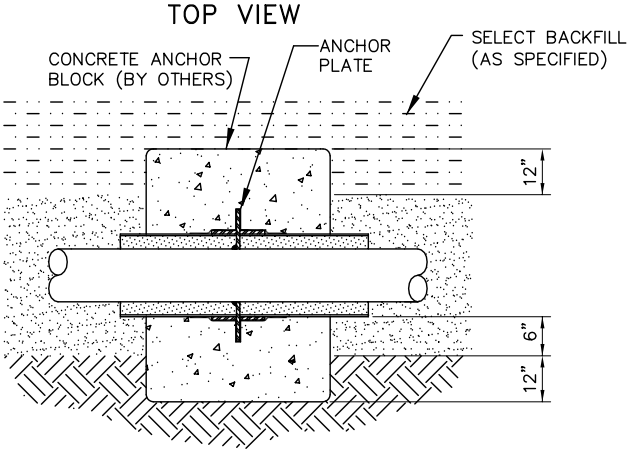

SIDE VIEW

STEEL PIPE ANCHOR SPECIFICATIONS

1. STEEL ANCHOR PLATE AND WELDED RINGS FURNISHED BY THERMACOR. ANCHOR PLATE SHALL MEET ASTM A36 AND ON ALL SIZES SHALL BE 1/2" THICK. ANCHOR PLATE SHALL EXTEND 2-1/2" BEYOND THE CASING DIAMETER ON ALL SIDES. ANCHOR PLATE SHALL BE CORROSION COATED WITH A HIGH TEMPERATURE COATING MATERIAL AFTER WATERSHED RINGS HAVE BEEN SEALED TO CASING BY HEAT SHRINK TAPE.
2. ANCHOR ASSEMBLY SHALL BE POURED IN A CONCRETE BLOCK BY THE CONTRACTOR IN THE FIELD.(MINIMUM 3000 psi) GENERALLY, THE ANCHOR BLOCK EXTENDS A MINIMUM OF 12" IN ALL DIRECTIONS BEYOND THE ANCHOR O.D. AND HAS A OVERALL LENGTH OF 24". THE JOB SITE CONDITIONS SHALL BE THE FINAL DETERMINING FACTOR FOR ANCHOR BLOCK SIZING.
3. DEPENDING ON ANCHOR BLOCK SIZE, STEEL REINFORCEMENT BARS MAY BE REQUIRED.

NOTE:

IT IS THE RESPONSIBILITY OF THE ***ENGINEER OF RECORD*** TO DESIGN THE ANCHOR BLOCKS APPROPRIATELY.

PIPING ANCHOR DETAIL

SCALE: NONE

THERMACOR	FERRO-THERM **Details**	FTAD **7.306**
	4 PIPE TRENCH DETAIL	3.14.07

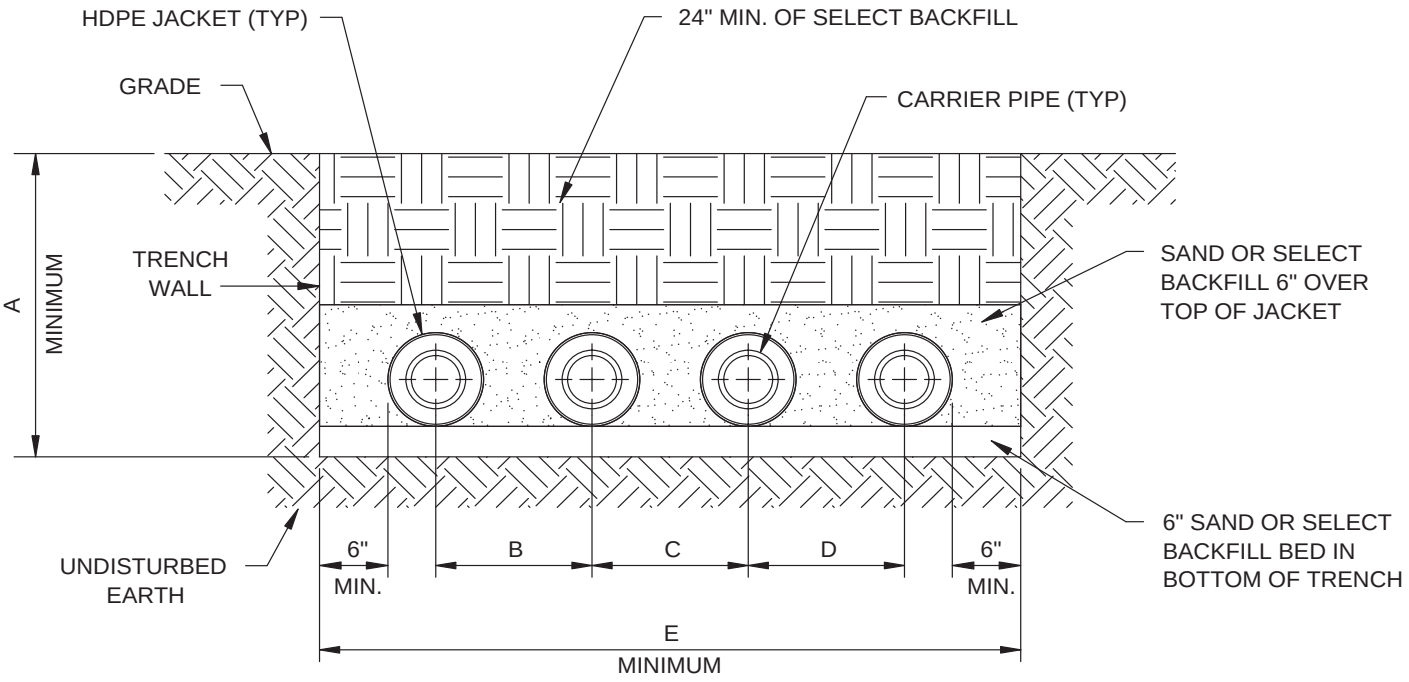

4-PIPE TRENCH SECTION

SCALE: NONE